Operation Manual

WARNING

Be sure to read this Operation Manual before use.

Bromley Incorporated in conjunction with Universal Space.
420-Crossen Avenue
Elk Grove IL 60007
847-427-0639 Service Dept.

Before using the product, be sure to read the follow:

To maintain the safety:

To ensure the safe usage of the product, be sure to read the following before using the product. The following instructions are intended for the users, operators and the personnel in charge of the operation of the product. After carefully reading and sufficiently understanding the warning display and cautions, handle the product appropriately. Be sure to keep this operation manual nearby the product or elsewhere convenient for referring to it when necessary.

Herein, explanations which require special attention are in sign of warning. Depending on the potentially hazardous degrees, the terms of NOTICE, WARNING CAUTION, etc. are used. Be sure to understand the content of the displays before reading the text.

WARNING

Disregarding this text could result in serious injury.

Caution

Disregarding this text could result in damage to the machine.

Notice

An advisory text to hint or help understanding.

CONTENTS

1. The company……3
2. Specifications……4
3. Package Contents……...5
4. Installation……6
5. Connecting the power cord and grounding…….8
6. Game Description……..….9
7. Switch……..……..…..9
8. Adjustment……10
9. Maintenance and inspections..……..……....12
10. Troubleshooting……..14
11. Overall Construction...……..15
Addendum
I/O chart
Wiring Diagram

1. The company

Thank you for purchasing the amusement Machine our company produce. Our company was found in 1993,it developed on and on and now it has rich human and material resources, it has been become a multiple-producing corporation that combine development, production, sale, management, service after selling. “Quality wins first, customer comes first and service wins first” is the company’s principles to go by and promise to customer.

DEFINITION OF LOCATION’S MAINTENANCE MAN AND SERVICEMAN

WARNING

Non-technical personnel who do not have technical knowledge and expertise should refrain from performing such work that this manual requires the location’s maintenance man or a serviceman to carry out, or work which is not explained in this manual. Failing to comply with this instruction can cause a severe accident such as electric shock.

Ensure that parts replacement, servicing & inspections, and troubleshooting are performed by the locations maintenance man or the serviceman. It is instructed herein that particularly hazardous work should be performed by the serviceman who has technical expertise and knowledge.

2. Specifications

Specifications

1 Rated power supply： AC110V 50/60Hz

2 Power Consumption： Min power consumption 75W
Max power consumption 225W

3 Dimensions： W836×D1203×H1448（mm）

4 Weight： **About** 200 Kg

5 Environment Condition: Temperature(indoor):-10□～+40□
Humidity: ≤90%
Atmospheric pressure:86Pa～106Pa

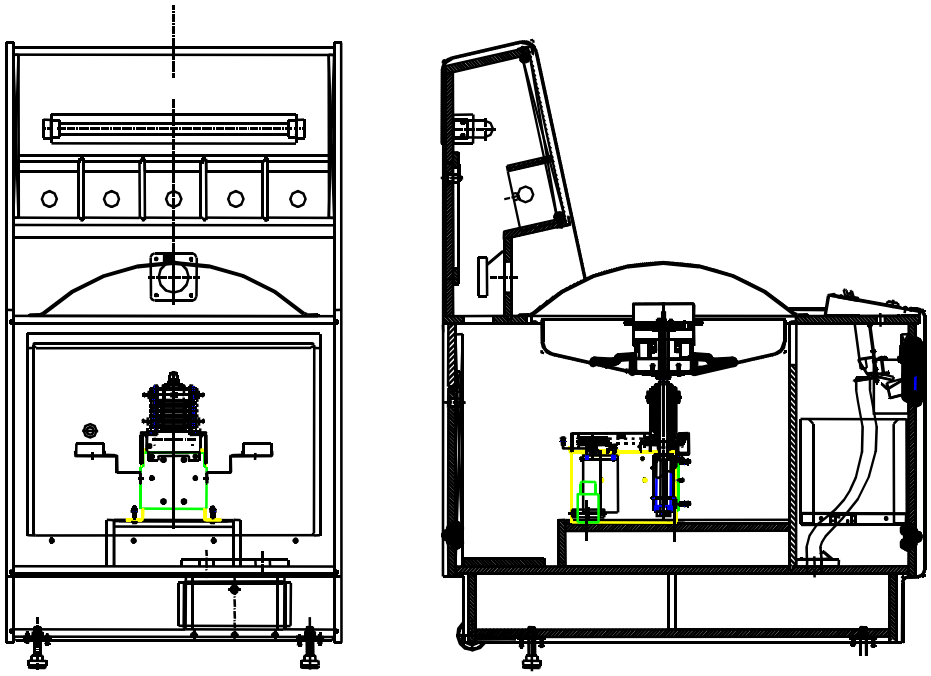

Note: Game parameters are subject change without notice.

3. Package contents

3.1 Body Assembly: 1 unit

- **Make sure that all the parts shown below are included in product package.**
- **If any parts are missing, contact your distributor.**

3.2 Accessories

NO	Component	Specification	Q'ty	Illustration	Note
1	Power wire	10A/250V 1.8m	1		
2	Fuse	3A/250V Φ5-20mm	1	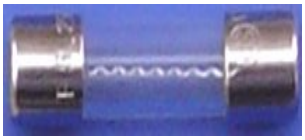	220V
		6.3A/125V Φ5-20mm	1		110V
3	Operation	ENGLISH	1	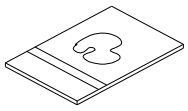	
4	key	171	2		Service door
		2222	2	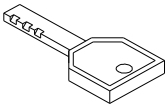	Cash door
5	Micro SW (ZIPPY)	CNR-05S-03	2	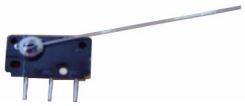	
6	Bulb	E148,110V/25W	1		
7	Lamp(inset)	12/1.5w	1	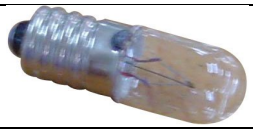	
8	Lamp(screw)	E10. 12/3W	1	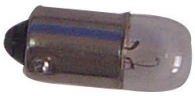	

****This part list is just for your reference. They are subject change without notice.****

4. Installation

WARNING

This product is an indoor game machine. Do not install it outside. Even indoors,

Avoid installing in places mentioned below so as not to cause a fire, electric shock , injury and or malfunctioning.

- Place subject to rain or water leakage, or places subject to high humidity in the proximity of an indoor swimming pool and or shower, etc.
- Place subject to direct sunlight, or places subject to high temperatures in the proximity of heating units, etc.
- Places filled with inflammable gas or vicinity of highly inflammable/volatile chemicals or hazardous matter.
- Dusty places.
- Sloped surfaces.
- Places subject to any type of violent impact.
- Vicinity of anti-disaster facilities such as fire exits and fire extinguishers.

LIMITATIONS OF USAGE REQUIREMENTS

WARNING

1. Be sure to check the Electrical Specifications. Ensure that this product is compatible with the location's power supply, voltage and frequency requirement. A plate describing Electrical Specifications is attached to the product. Non-compliance with the Electrical Specifications can cause a fire and electric shock.
2. Putting many loads on one electrical outlet can cause generation of heat and a fire resulting from overload.

Location to avoid installing

WARNING

Do not leave the machine on a slope, otherwise the machine may topple or cause unforeseen accidents.

Play zone

Space for Operation and Maintenance

This machine requires space for playing the game (play zone) and for maintenance (maintenance zone) as shown below. Be sure to leave enough space when installing the machine.

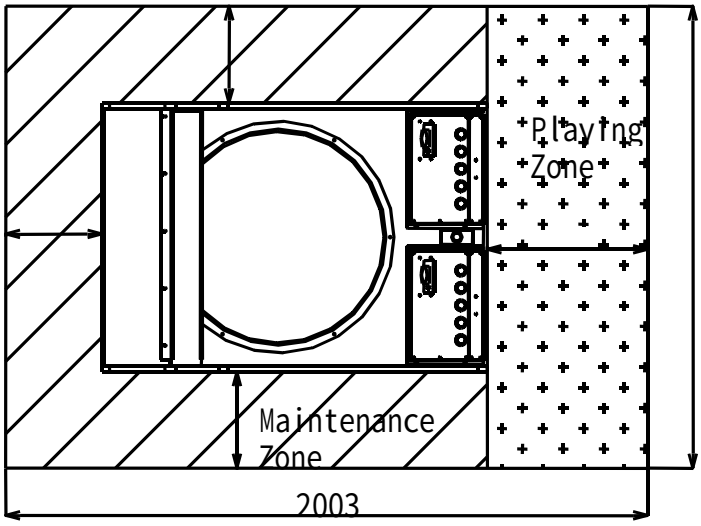

Game leveling

Install this machine on a flat surface. Adjust levelers to lift casters off the ground and level game.

Make sure that the machine is level with the floor. If the machine is not level medals may not be play well.

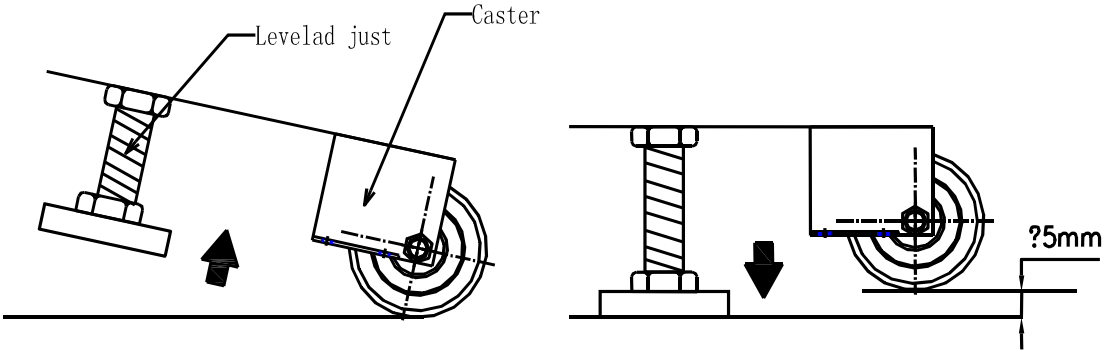

Move Fix

5. Connecting the power cord and grounding

The connection:

1. Insert the plug of power cord into the power socket of the machine.
2. Insert the power cord plug into a service outlet.

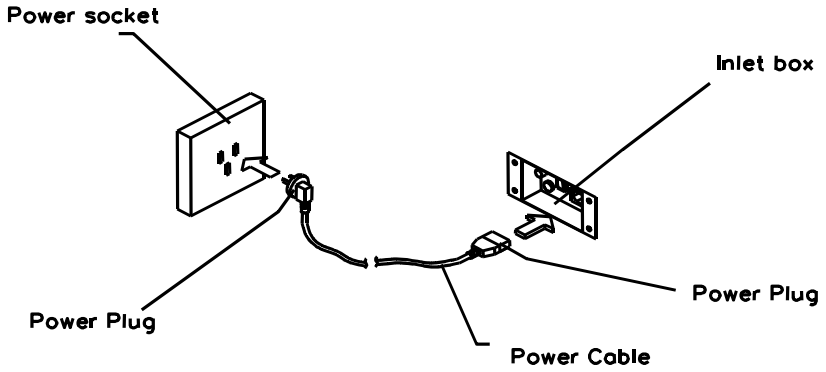

WARNING

Be sure to connect the ground wire before turn on the machine. Failure to connect the ground wire could result in electric shock if power occurs.

Warning:

★ Do not put heavy items on power cord.

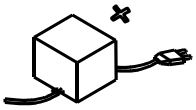

★ Do not touch the power plug with a wet hand.

★ Do not draw or twist the cord.

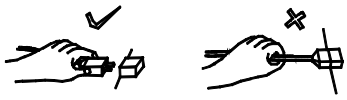

★ Do not place the cord near a heat source.

★ Do not place the cord where the player can easy to touch or kick.

★ Run this machine with the correct power configuration.

6. Game description

The instruction of how to play

1. Inset coin(s)
2. Press button for color you think ball will stop in
3. Pick color while “ Press button” light is flashing.
4. Pick additional colors to increase chances of winning.

7. Switches

Game parameters are controlled by a dip switch banks labeled SW1 Each bank eight switches where in the SW1-2 for example refers to bank 1 switch position 2.

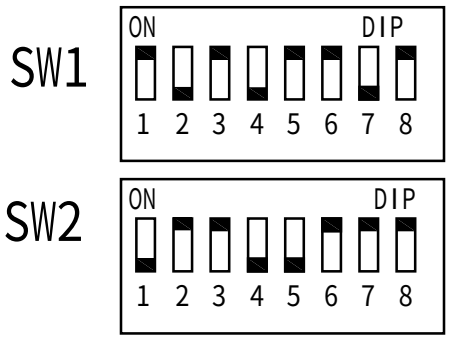

Note: Game parameters are subject change without notice.

8. Adjustment

8.1 Group of score

Adjust it to set the group of score. There are 8 options for user to select. It controlled by SW11~SW13.

Group of score	Option	SW11	SW12	SW13	Note
SW11~SW13	1	on	on	on	
	2	off	on	on	
	3	**ON**	**OFF**	**ON**	
	4	off	on	on	
	5	on	on	off	
	6	off	on	off	
	7	on	off	off	
	8	off	off	off	

	Red	Green	Blue	Yellow	White
1	7	7	15	20	40
2	15	15	25	40	75
3	**25**	**25**	**50**	**75**	**125**
4	50	50	100	150	250
5	7	7	15	20	40
6	15	15	25	40	75
7	25	25	50	75	125
8	50	50	100	150	250

8.2 Credit

Time	Options	SW14	SW15	Note
SW14 ~ SW15	1	on	on	
	2	**OFF**	**ON**	
	3	on	off	
	4	off	off	

8.3 Time (for stop the wheel)

Adjust it to set the time to stop the wheel. There are 4 options for user to select. It controlled by SW17~SW18.

Time	Options	SW17	SW18	Note
SW17 ~ SW18	5s	on	on	
	10s	**OFF**	**ON**	
	10s	on	off	
	20s	off	off	

8.4 Time (Credit) :

Adjust it to set the time for chip in of this game. There are 4 options for user to select. It controlled by SW21~SW22.

payout	Option	SW21	SW22	Note
SW21 ~ SW22	10s	on	on	
	15s	**OFF**	**ON**	
	20s	on	off	
	25s	off	off	

8.5 Attract Mode:

Mode	Option	SW23	Note
SW23	10s	**ON**	
	15s	off	

8.6 Double score:

Double score	Option	SW24	Note
SW24	10s	on	
	15s	**OFF**	

8.7 Mercy Ticket:

Adjust it to set the Mercy Ticket of this game. There are 4 options for user to select. It controlled by SW25~SW26.

Mercy Ticket	Option (second)	SW25	SW26	Note
SW25 ~ SW26	0	on	on	
	1	**OFF**	**ON**	
	2	on	off	
	3	off	off	

8.5 Fault display

1. When starting the game machine or entering the test condition, the related contents show wrong the below information.

Input	Content	Input	Content	Input	Content
I1	**Insert Coin 1#**	**I11**	**Insert Coin 2#**	**I21**	**SW(red)**
I2	**Feedback(ticket Mech) 1#**	**I12**	**Feedback(ticket Mech) 2#**	**I22**	**SW(green)**
I3	**Reset(ticket Mech) 1#**	**I13**	**Reset(ticket Mech) 2#**	**I23**	**SW(blue)**
I4	**Lamp(red) 1#**	**I14**	**Lamp(red)2#**	**I24**	**SW(yellow)**
I5	**Lamp(green) 1#**	**I15**	**Lamp(green) 2#**	**I25**	**SW(white)**
I6	**Lamp(blue) 1#**	**I16**	**Lamp(blue) 2#**	**I26**	**Test SW**
I7	**Lamp(yellow) 1#**	**I17**	**Lamp(yellow) 2#**	**I27**	**Setting SW**
I8	**Lamp(white) 1#**	**I18**	**Lamp(white) 2#**	**I28**	
I9	**Stop**	**I19**	**Alarm**	**I29**	
I10		**I20**		**I30**	

2. The following form represent that the related output signed in the below list should be checked when any devices of the machine couldn't work.

Output	Content	Output	Content	Output	Content
Out1	Coins	Out11	Ticket driver2#	Out31	
Out2	Payout	Out12	Lamp(red) 1#	Out32	
Out3	Ticket driver1#	Out13	Lamp(green) 1#	Out33	Lamp2(green)
Out4	Lamp(red) 1#	Out14	Lamp(blue) 1#	Out34	Lamp1(red)
Out5	Lamp(green) 1#	Out15	Lamp(yellow) 1#	Out35	Lamp4(yellow)
Out6	Lamp(blue) 1#	Out16	Lamp(white) 1#	Out36	Lamp3(blue)
Out7	Lamp(yellow) 1#	Out17	Stop lamp	Out37	Control of lamp1#
Out8	Lamp(white) 1#	Out18	Motor for wheel	Out38	Lamp5(white)
Out9		Out19	Lamp#1(for chip in)	Out39	Control of lamp2#
Out10		Out20	Lamp#2(for chip in)	Out40	Control of lamp3#

Note: Game parameters are subject change without notice.

9. Maintenance and inspections

Safety checks

Check the points listed before operating the machine. These checks are necessary for safe machine operation.

1 Are all the level adjusters adjusted?

2 Is there sufficient play zone around the machine?

HANDLING PRECAUTIONS

When installing or inspecting the machine, be very careful of the following points and pay attention to ensure that the player can enjoy the game safely.

⚠ WARNING

1. Before performing work, be sure to turn power off. Performing the work without turning power off can cause an electric shock or short circuit. In the case work should be performed in the status of power on, this manual always states to that effect.
2. To avoid electric shock or short circuit, do not plug in or unplug quickly.
4. Do not expose Power Cords and Earth Wires are susceptible to damage.
5. Damaged cords and wires can cause electric shock or short circuit.
6. When or after installing the product, do not unnecessarily pull the power cord. If damaged, the power cord can cause a fire or electric shock.
7. Be sure to use fuses meeting specified rating. Using fuses exceeding can cause an electric shock.

OPERATION WARNING

★ Should a problem occur, switch OFF the power immediately and stop operating the machine. Then unplug the power cord the service outlet. Operating the machine without correcting the problem may cause a fire or accident.

★ Dust accumulated on the power plug may cause a fire. Check the plug regularly and remove any dust.

★ Insert the power plug securely into the service outlet. Poor contact may cause overheating, resulting in fire or burns.

★ Before operating the machine, always check that the machine has been installed according to the instructions and procedures in this Operation Manual. Failure to install correctly may result in a fire, electric shock, injury, or equipment malfunction.

★ To avoid injury resulting from down, and electric shock due to spilled drinks, instruct the player not to place heavy items or drinks on the product.

★ Always turn off the power first to protect other personnel from electric shock, accidents and injury, and to prevent damage to electrical circuits.

★ If a fault occurs, first check that all the connectors are firmly connected.

 Contact your distributor if none of the cases below applies to the problem, or if the action listed does not appear to resolve the problem.

10. Troubleshooting

Problems	Cause	Countermeasures
With Main SW ON, no activation.	Power is not supplied.	Securely insert the power plug into the plug socket.
	Power supply/voltage is not correct.	Make sure that power supply/voltage is correct.
No sound is emitted.	Sound volume adjustment is not appropriate.	Adjust sound volume.
The lamp does not light up.	Lamp has burnt out	Replace the lamp.
The whole game does not run	I/O board adjust wrong	Check the I/O chart
	Loose contact	Check the connector
Noise	The parts of the game were loosening.	Screw them in tighten.

11. Overall construction

11.1 Body shell

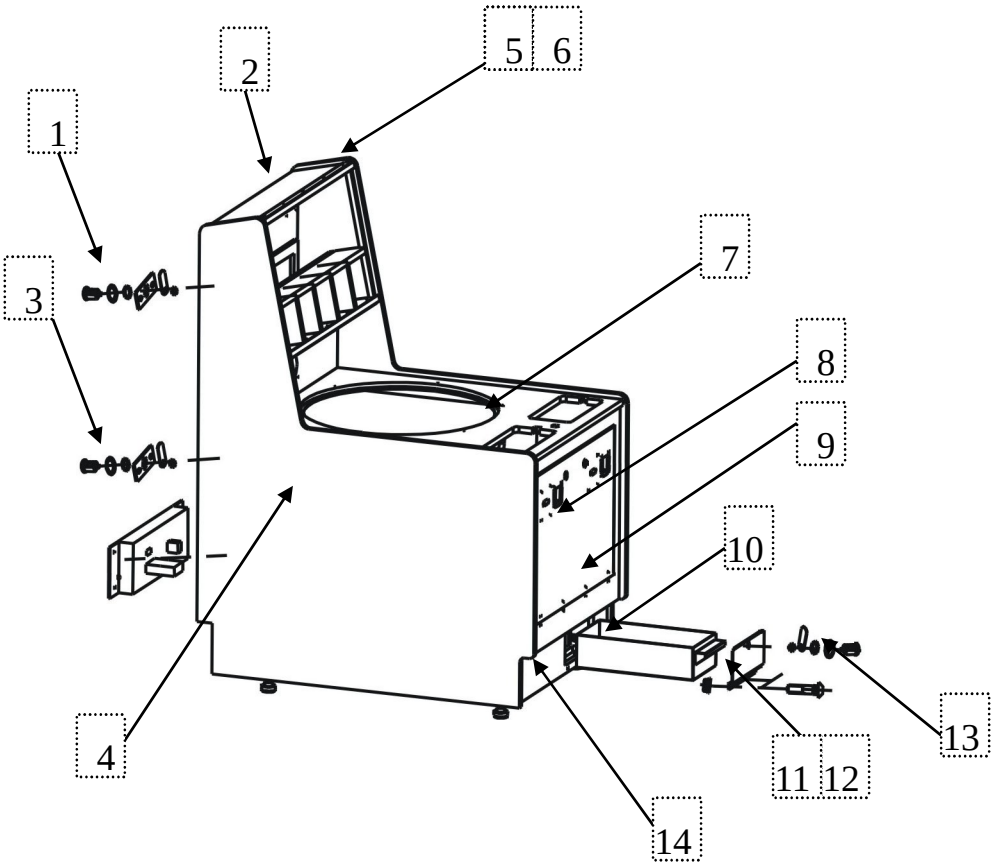

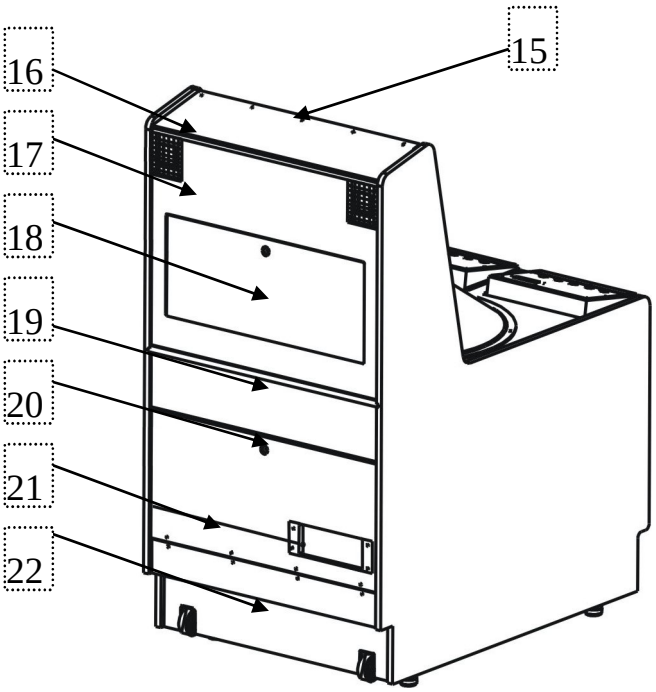

Item	Part NO.	Content	Q'ty	Specification	Note
1	C-101-403-000	Lock	1	171	
2	C-101-501-000	Board(top)	1	Plywood	
3	C-101-403-000	Lock	1	171	
4	C-101-502-000	Board(side)	2	Plywood	
5	C-101-601-000	Cushion	2	EVA	
6	C-101-101-000	Angle iron	2	Q235	
7	C-101-503-000	Board(control Panel)	1	Plywood	
8	C-101-504-000	Door1	1	Plywood	
9	C-101-409-000	Hinge(front door)	1	Q235	
10	C-101-102-000	Cash box	1	Electrolysis board	
11	C-101-103-000	Door2	1	Q235	
12	C-101-410-000	Hinge	1	Q235	
13	C-101-404-000	Lock(Cash box)	1	2222	
14	C-101-505-000	Board3	1	Plywood	
15	C-101-001-000	Body Shell	1	Plywood	
16	C-101-506-000	Board4	2	Plywood	
17	C-101-507-000	Rear Up Board	1	Plywood	
18	C-101-508-000	Rear Up Door	1	Plywood	
19	C-101-509-000	Rear Mid Board	1	Plywood	
20	C-101-510-000	Rear Mid Door	1	Plywood	
21	C-101-411-000	Hinge(Rear Door)	1	Q235	
22	C-101-511-000	Rear down Board	1	Plywood	

11.2 Control panel：

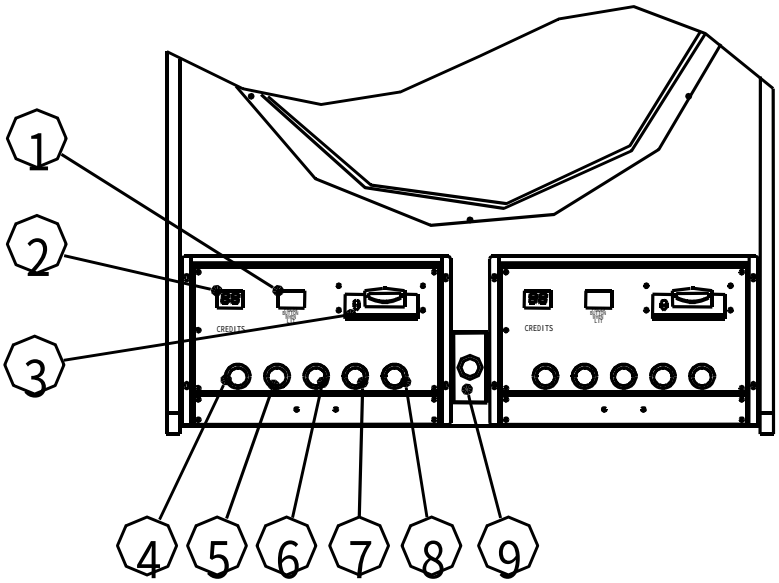

Item	Part NO.	Content	Q'ty	Specification	Note
1	C-101-408-000	Indicate Lamp	2		
2	C-101-802-000	LED	2		
3	C-101-412-000	Coin Slot	2	Stainless steel	
4	C-101-803-000	Button(Red)	2	Lamp and Switch	
5	C-101-804-000	Button(Green)	2	Lamp and Switch	
6	C-101-805-000	Button(Blue)	2	Lamp and Switch	
7	C-101-806-000	Button(Yellow)	2	Lamp and Switch	
8	C-101-807-000	Button(White)	2	Lamp and Switch	
9	C-101-808-000	Stop Button	1	Lamp and Switch	

11.3 Overall

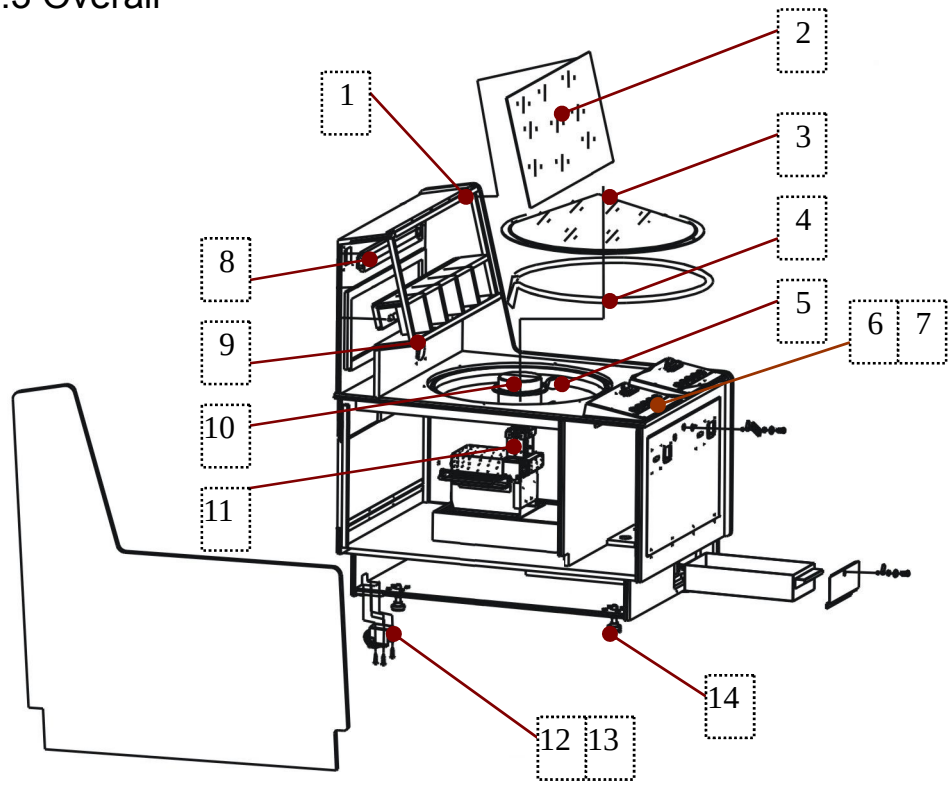

Item	Part NO.	Content	Q'ty	Specification	Note
1	C-101-413-000	Wreath	2	Rubber	
2	C-101-602-000	Marquee Board	1	Acrylic	
3	C-101-414-000	Cover(Wheel)	1	steel Acrylic	
4	C-101-603-000	Light Belt	1		
5	C-101-415-000	Ball	1	stainless	
6	C-101-002-000	Assy(control panel)	2		
7	C-101-104-000	Control Panel	2	Q235	
8	C-101-416-000	Fluorescence	1	MXT5-Y14 110V	
9	C-101-105-000	Speaker Cover	1	Q235	
10	C-101-003-000	Wheel Organ	5		
11	C-101-004-000	Eddy Organ	1		
12	C-101-106-000	Support Board	4	Q235	
13	C-101-107-000	Support adjuster	4		
14	C-101-108-000	Adjuster	4		

11.4 Wheel Assy

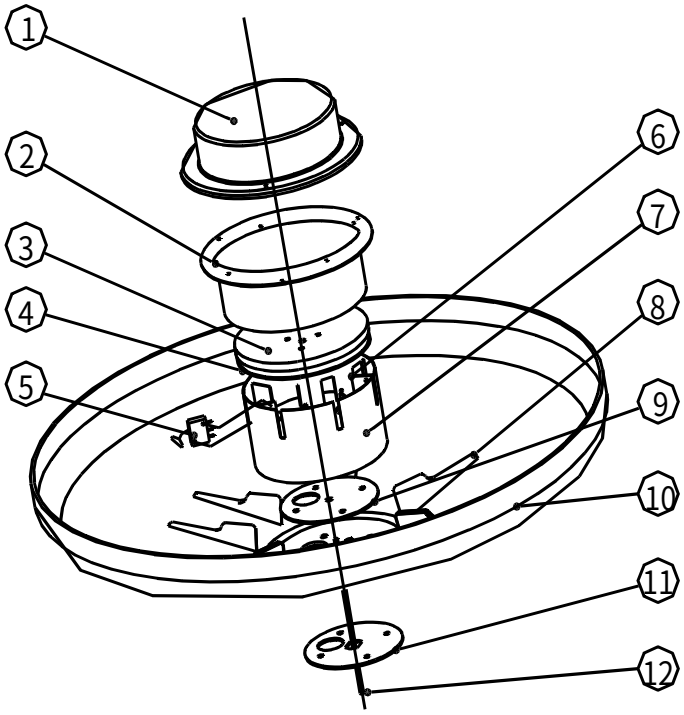

Item	Part NO.	Content	Q ’ ty	Specification	Note
1	C-101-604-000	Cover(for lamp)	1	Acrylic	
2	C-101-109-000	Cover(Lamp Holder)	1	Electrolyte	
3	C-101-605-000	Lamp Holder	1	Acrylic	
4	C-101-809-000	Moving Lamp Board	1		
5	C-101-417-000	Micro SW	7		
6	C-101-110-000	Micro SW base	1	Jointing	
7	C-101-111-000	Micro SW Holder	1	Electrolyte	
8	C-101-606-000	Separate board	7	Acrylic	
9	C-101-112-000	Circle1	1	Electrolyte	
10	C-101-607-000	Wheel	1		
11	C-101-113-000	Circle2	1	Q235	
12	C-101-301-000	Screw	1	Stainless steel	

11.5 Eddy Assy 1

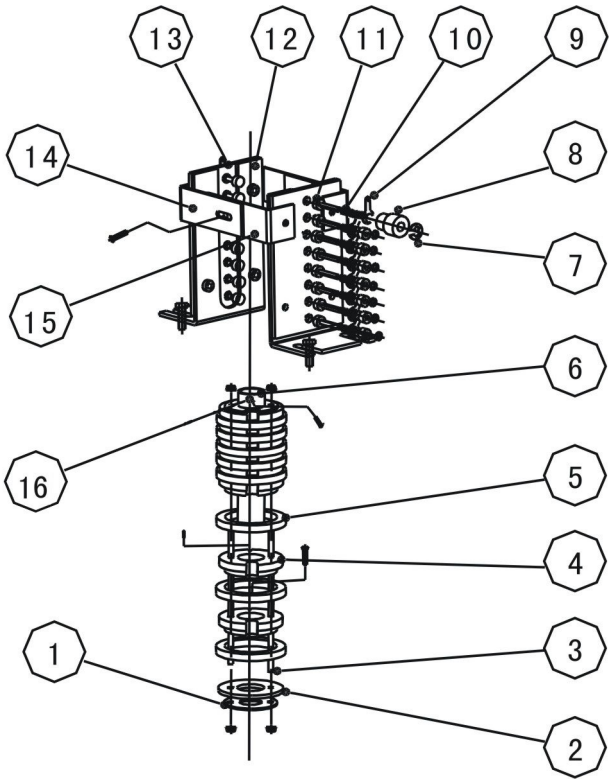

Item	Part NO.	Content	Q ’ ty	Specification	Note
1	C-101-114-000	Cushion	1	Electrolyte /δ1.5	
2	C-101-608-000	Nylon Cushion	1	Nylon/δ3	
3	C-101-302-000	M4 Screw	2	Stainless steel M4	
4	C-101-609-000	Impact Circle2	8	Nylon	
5	C-101-115-000	Impact Circle 1	8	Stainless steel	
6	C-101-303-000	Fixation Shaft	1	Q235	
7	C-101-116-000	E-type Cushion	16		
8	C-101-117-000	Brass cover	16	Brass	
9	C-101-118-000	Electric Piece	16	Brass	
10	C-101-304-000	Spring	16	Brass	
11	C-101-305-000	Electric Pole	16	Brass	
12	C-101-119-000	Support Board	2		
13	C-101-120-000	Support Frame	2	Electrolyte	
14	C-101-121-000	Fixation board（out）	2	Electrolyte	
15	C-101-122-000	Fixation board（inner）	2	Electrolyte	
16	C-101-822-000	Wire	1		

11.6 Eddy Assy 2

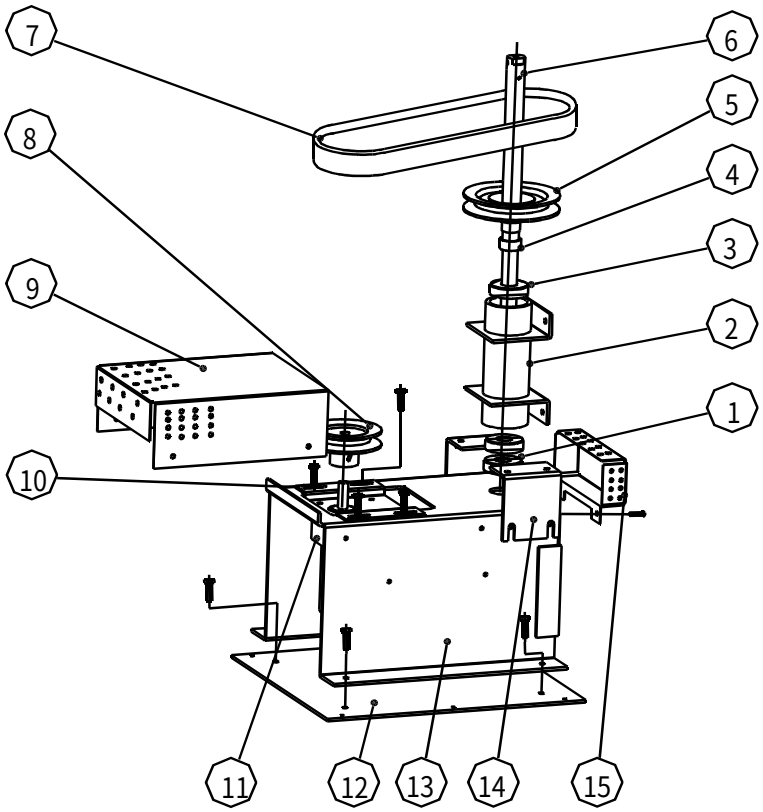

Item	Part NO.	Content	Q'ty	Specification	Note
1	C-101-306-000	Block	1	65SiMnA	
2	C-101-123-000	Cover(axletree)	1	Q235	
3	C-101-418-000	Axletree	2	6203-2RZ	
4	C-101-124-000	Ring	1	Q235	
5	C-101-125-000	Wheel2	1		
6	C-101-307-000	Shaft	1	#45	
7	C-101-419-000	Strap	1	Type: A，L=550	
8	C-101-126-000	Wheel 1	1		
9	C-101-127-000	Cover(Wheel1)	1		
10	C-101-128-000	Fixation (Motor)	1	Electrolyte	
11	C-101-420-000	Motor	1	30R2BECI-D3	USA
12	C-101-129-000	Base board	1	Electrolyte	
13	C-101-130-000	Support Frame	1		
14	C-101-131-000	Support Frame	2	Q235	
15	C-101-132-000	Cover(Wheel2)	1		

11.7 Electric parts 1

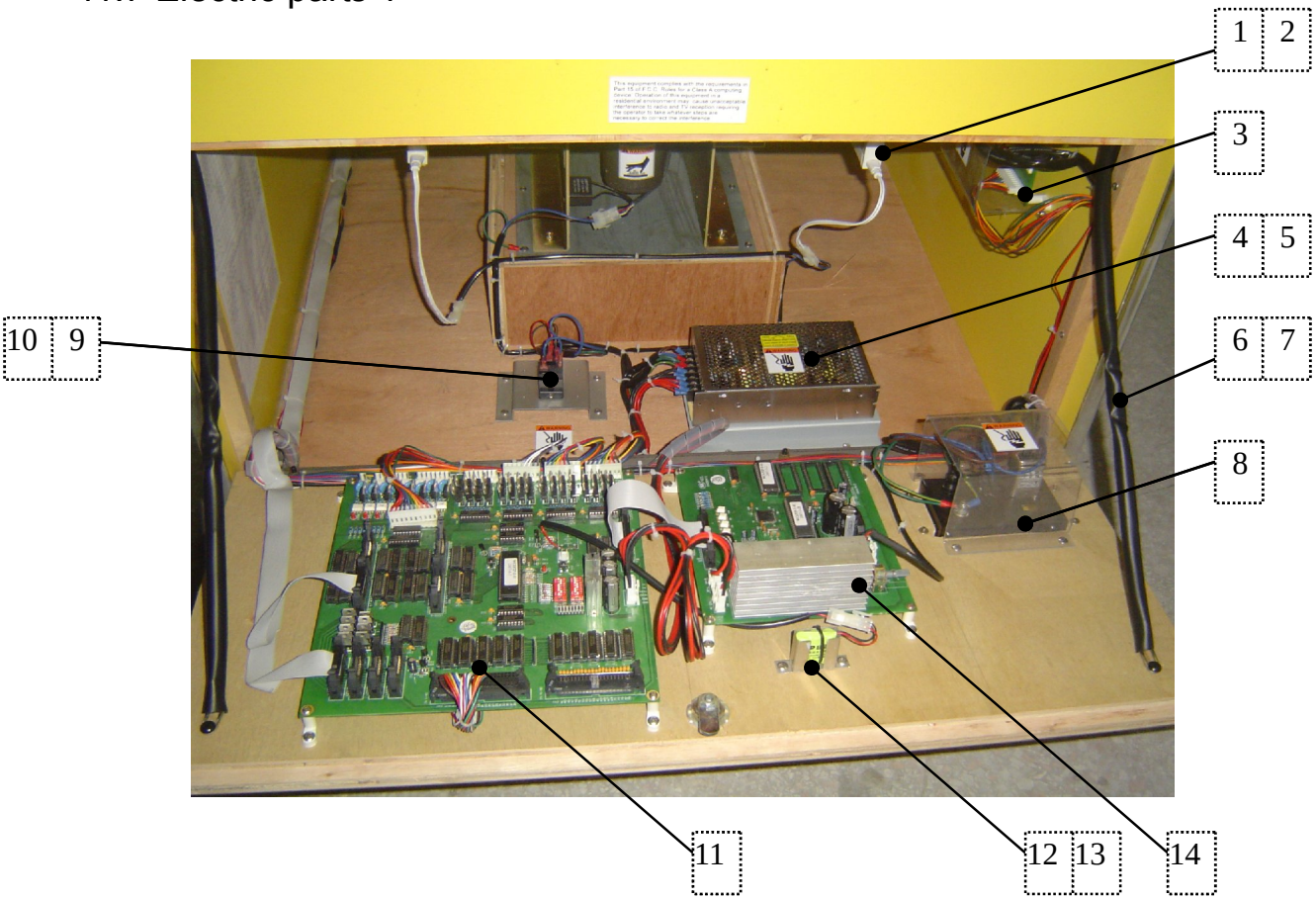

Item	Part NO.	Content	Q'ty	Specification	Note
1	C-101-421-000	Fluorescence	2	MXT5-Y13 110V	
2	C-101-133-000	Board(Fluorescence)	2	Electrolyte	
3	C-101-810-000	Controllable silicon board	1	JJJ14D	
4	C-101-811-000	Power Box	1	S150-12	
5	C-101-134-000	Power Box Holder	7	Electrolyte	
6	C-101-422-000	Chain tube 2	2	PVC	
7	C-101-423-000	Chain 2	2	Q235	
8	C-101-812-000	Power box Assy	1		
9	C-101-813-000	Relay	1	T9AP5D52-12	
10	C-101-135-000	Fixation Holder(Relay)	1	Electrolyte	
11	C-101-814-000	Mainboard	1	PLAYC8	
12	C-101-815-000	Battery	1		
13	C-101-136-000	Battery Frame		Electrolyte	
14	C-101-816-000	Musicboard		SY-MUSIC-01	

11.8 Electric parts 2

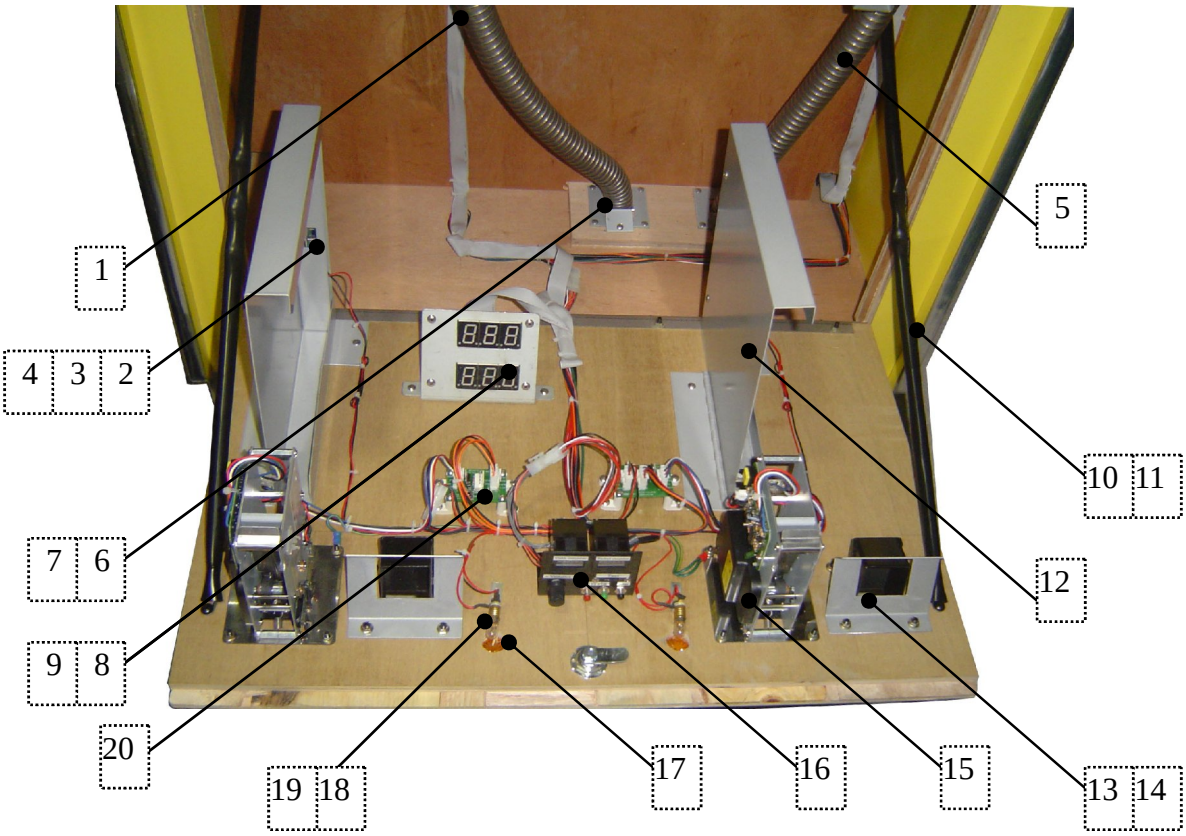

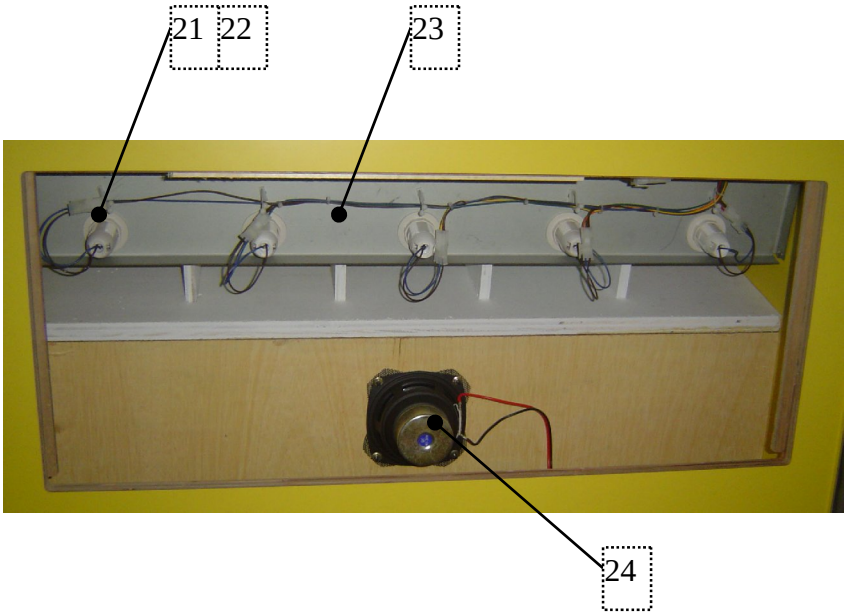

Item	Part NO.	Content	Q'ty	Specification	Note
1	C-101-424-000	Tube1	1	Stainless steel	
2	C-101-425-000	Micro SW	2		
3	C-101-137-000	FixationBoard	1	Electrolyte	
4	C-101-138-000	Board(Micro SW)	1	Electrolyte	
5	C-101-425-000	Coin Tube2	2	Stainless steel	
6	C-101-139-000	Board(coin tube)	2	Electrolyte	
7	C-101-140-000	Block(coin tube)	2	Electrolyte	
8	C-101-817-000	LED	1	JJJ18S8.PCB	
9	C-101-141-000	LED fix board	1	Electrolyte	
10	C-101-426-000	Chain1	1	Q235	
11	C-101-427-000	Chain tube1	1	PVC	
12	C-101-142-000	Ticket Box	1	Electrolyte	
13	C-101-143-000	Board(Coin exit Box)	2	Electrolyte	
14	C-101-144-000	Coin exit Box	2	Q235	
15	C-101-818-000	Ticket Assy	2		
16	C-101-819-000	Test board Assy	1	1K pot ,4 buttons	
17	C-101-610-000	Indicate Cover	2	ABS	
18	C-101-407-000	Indicate Lamp	2	E10 12V 3W	
19	C-101-428-000	Lamp Holder	2	E10 double pin	
20	C-101-820-000	Ticket Transport board	2	TICK-CH.PCB	
21	C-101-429-000	Lamp Holder	5	E14 T210 2A/250V	
22	C-101-406-000	Bulb	5	E14S 110V/25W	
23	C-101-145-000	Fixation Board(ticket Assy)	1	Electrolyte	
24	C-101-430-000	Speaker	1	4''	

11.9 Electric parts 3

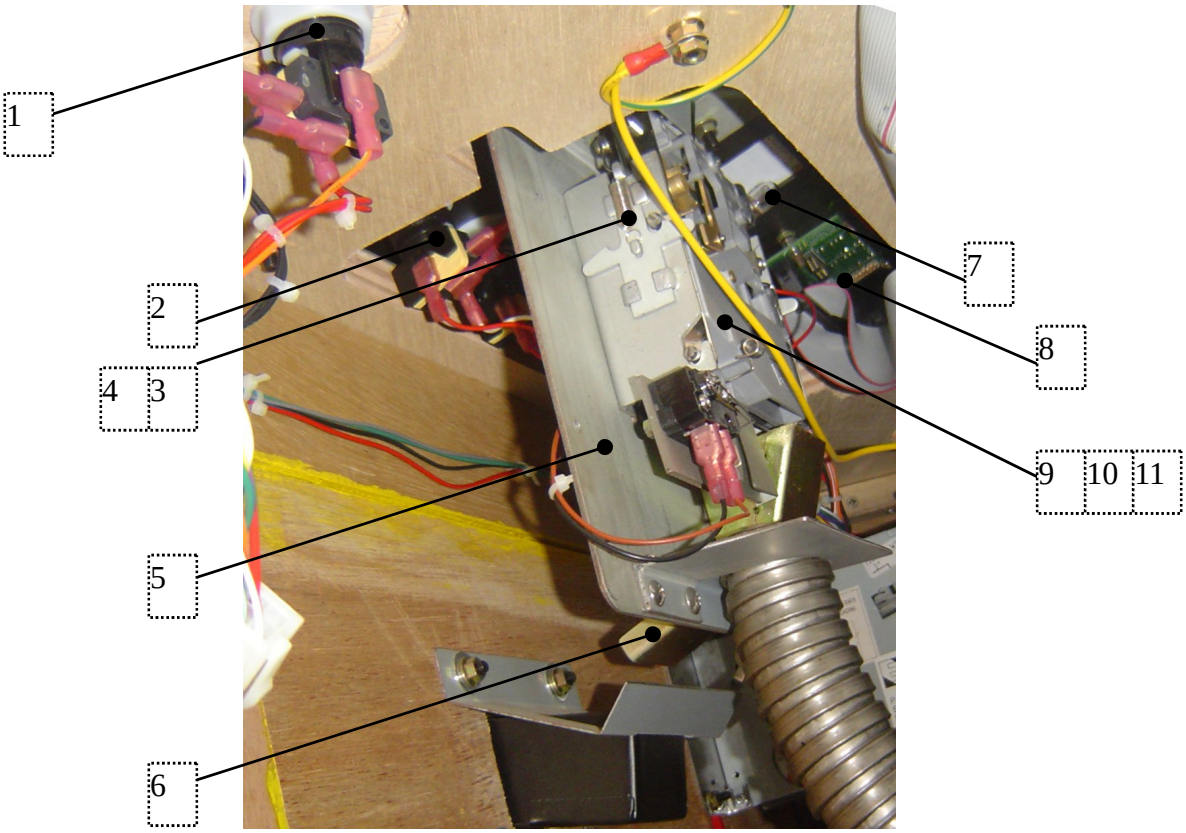

Item	Part NO.	Content	Q'ty	Specification	Note
1	C-101-808-000	Button(B)	2	Lamp, SW	
2	C-101-817-000	Button(S)	10	Lamp, SW	
3	C-101-146-000	Coin Frame	2		
4	C-101-308-000	Coin Spring	2	65Mn	
5	C-101-147-000	Fixation board(Coin)	2	Electrolyte	
6	C-101-148-000	Coin exit slot	2	Q235	
7	C-101-408-000	Indicate lamp	2	E10 Double pin	
8	C-101-802-000	LED	1	LED16B2.PCB	
9	C-101-149-000	Block(Coin)	1	Electrolyte	
10	C-101-150-000	Board(Coin)	1	Electrolyte	
11	C-101-151-000	Holder(Coin)	1	Electrolyte	

11.10 Graphic list:

Test board: 1. coin counter: record the number of coins. 2. Ticket counter: record the number of tickets. 3. Ticket reset: If the game experiences a ticket jam. After the jam is cleared and the reset button is pressed the game will resume the ticket payout.

Item	Part NO.	Content	Q'ty	Specification	Note
1	C-101-702-000	Marquee	1		
2	C-101-703-000	Graphic(speaker)	1		
3	C-101-705-000	Wheel	1		
4	C-101-706-000	Graphic(button)	1		
5	C-101-707-000	Graphic(ticket)	2		
6	C-101-708-000	Front door	1		
7	C-101-709-000	Graphic (Side)	2		
8	C-101-710-000	Graphic(ContrloPanel)	2		
9	C-101-711-000	Score	2		
10	C-101-712-000	Coin Counter	1		
11	C-101-713-000	Ticket Counter	1		
12	C-101-714-000	Volume	1		
13	C-101-715-000	Graphic(Meter)	1		
14	C-101-716-000	Graphic1(Rear door)	1	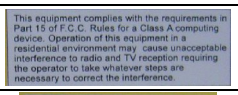	
15	C-101-717-000	Graphic2(Rear door)	1	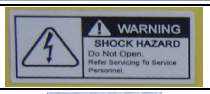	
16	C-101-718-000	Graphic(high voltage)			
17	C-101-719-000	Graphic(high temperature)			
18	C-101-720-000	Glisten paper1	1	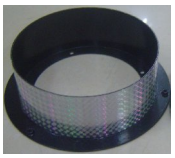	
19	C-101-721-000	Glisten paper2	1		